WASHBASIN

Undercounter basin WU, square, 600 mm, without tap hole, with overflow

DE: Unterbauwaschtisch WU, eckig, 600 mm, without tap hole, with overflow
FR: Vasque sous plan WU, rectangle, 600 mm, sans trou, avec trop-plein
IT: Lavabo sottopiano WU, rettangolare, 600 mm, senza foro per rubinetto, con troppopieno
NL: Onderbouwwastafel WU, hoekig, 600 mm, zonder kraangat, met overloop

PRODUCT DETAILS	
Product code	LW1536Y
EAN code	40 50663 09542 0
Size	w:590×d:380×h:207 (mm)
Weight	11,2 kg
Colour	White
Material	Ceramic
Technologies	CEFIONTECT

Weights and measurements shown may be subject to small variations or are indicative.
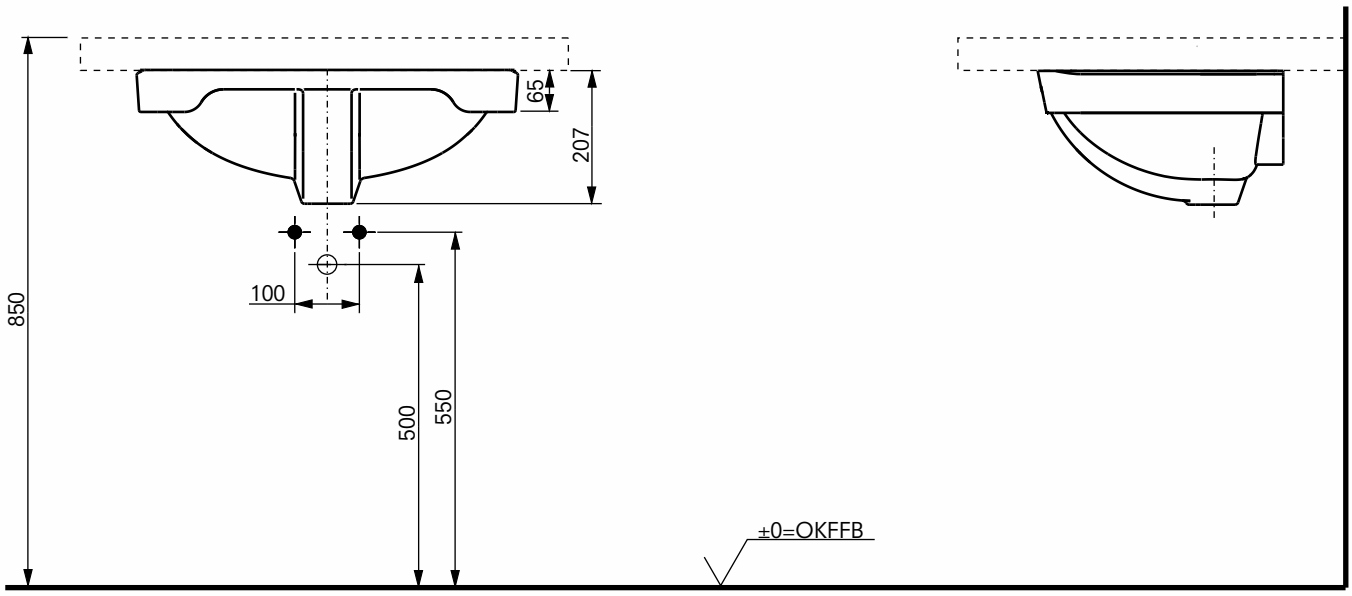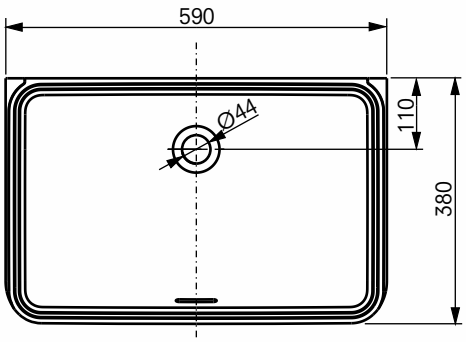
TECHNICAL DRAWINGS